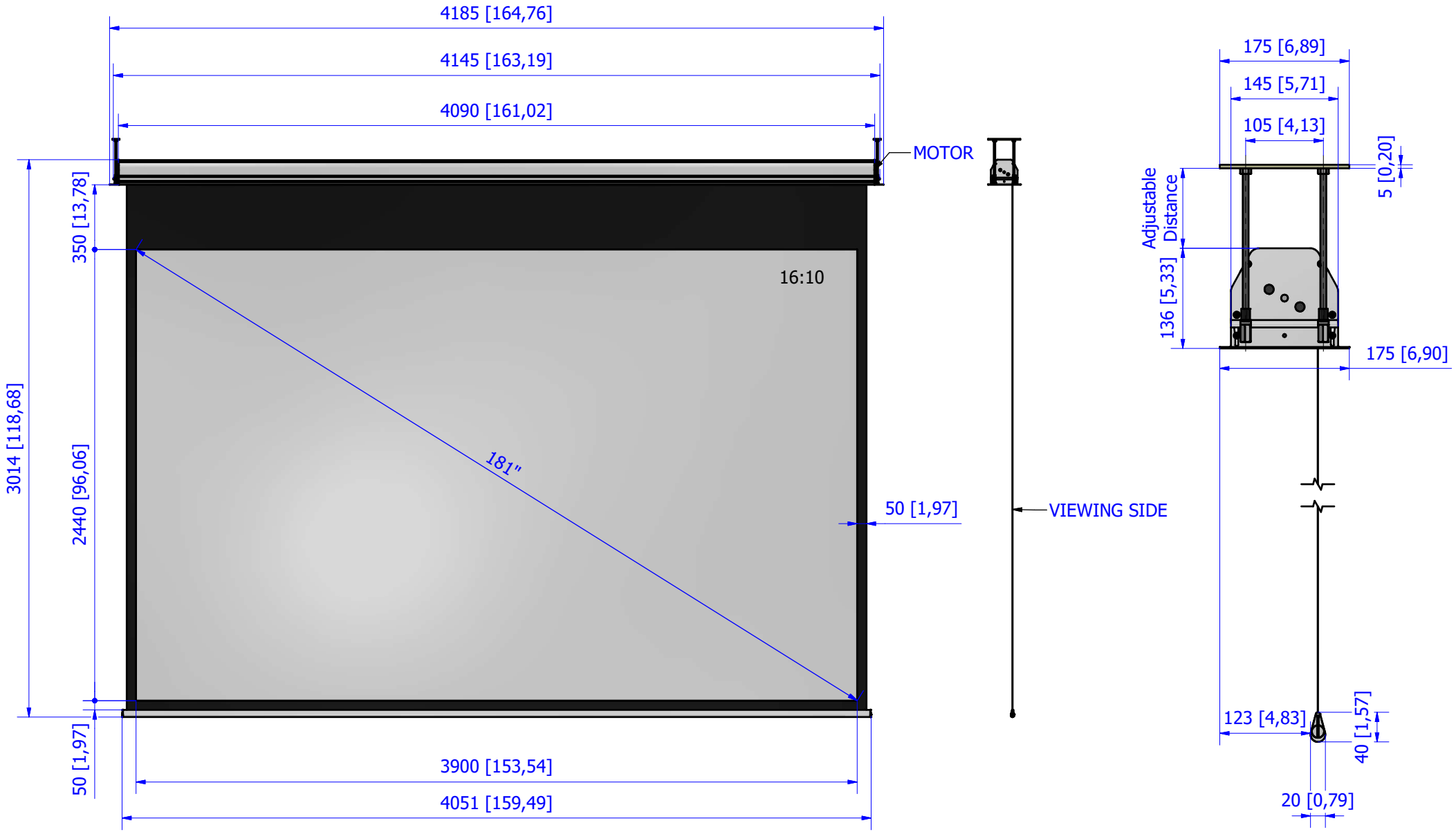

Cut out for false ceiling: 4165 x 155 mm

Dimensions are in mm [inch]	SCREENLINE the screen makes the difference	Description: Inceiling			Codice univoco: Standard	Product Code: IC390CXX	
According on the required fabric, a welding line may be present		Weight: 35kg	Shipping weight: 44kg	Encumbrance: 419x18x14	Drawer: F.A.	VCode: UT-0009894.iam	
Please notice that all dimensions are subject to conventional industry tollerances				Shipping dimensions: 435x23x23	Date: 18/02/2021	Sheet: A3	Scale: 1 : 20